www.radiomuseum.org: upload by Egon Penker; download by John OBrien Wed Mar 13 13:46:55 CET 2013 [1544 x 2200, 79kb]

radiomuseum.org: 3-RD-30 Ch= RC-1202AB

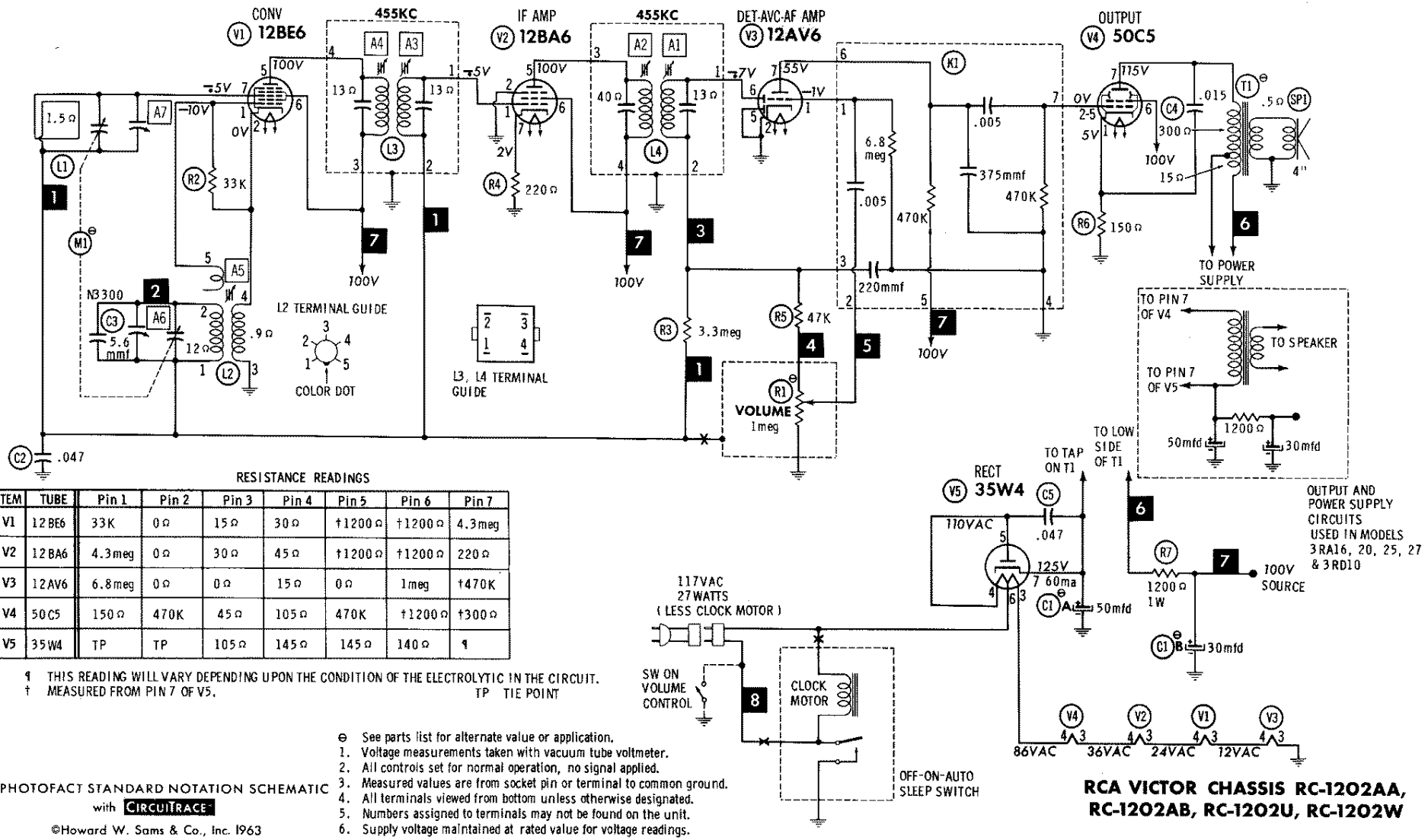

RESISTANCE READINGS

ITEM	TUBE	Pin 1	Pin 2	Pin 3	Pin 4	Pin 5	Pin 6	Pin 7
V1	12BE6	33K	0Ω	15Ω	30Ω	†1200Ω	†1200Ω	4.3meg
V2	12BA6	4.3meg	0Ω	30Ω	45Ω	†1200Ω	†1200Ω	220Ω
V3	12AV6	6.8meg	0Ω	0Ω	15Ω	0Ω	1meg	†470K
V4	50C5	150Ω	470K	45Ω	105Ω	470K	†1200Ω	†300Ω
V5	35W4	TP	TP	105Ω	145Ω	145Ω	140Ω	¶

¶ THIS READING WILL VARY DEPENDING UPON THE CONDITION OF THE ELECTROLYTIC IN THE CIRCUIT.
† MEASURED FROM PIN 7 OF V5. TP TIE POINT

⊖ See parts list for alternate value or application.
1. Voltage measurements taken with vacuum tube voltmeter.
2. All controls set for normal operation, no signal applied.
3. Measured values are from socket pin or terminal to common ground.
4. All terminals viewed from bottom unless otherwise designated.
5. Numbers assigned to terminals may not be found on the unit.
6. Supply voltage maintained at rated value for voltage readings.

A PHOTOFACT STANDARD NOTATION SCHEMATIC with CIRCUITRACE

©Howard W. Sams & Co., Inc. 1963

RCA VICTOR CHASSIS RC-1202AA, RC-1202AB, RC-1202U, RC-1202W